1	2	3	4	5	6	7	8	9	10	11	12	13	14	15
28x / 33x M6x16	2x M10x30	2x M10	2x M6	7x M5x10	16x M6	4x M10	2x	5x 500MM	1x M10 washers/nuts	1x	1x	1x	10x / 15x	4x M6

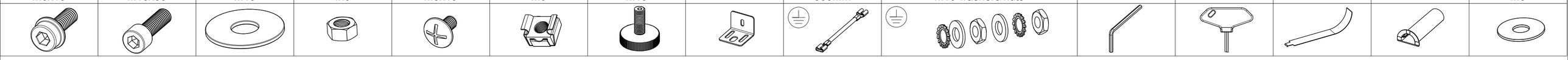

FIST-GR3-STD

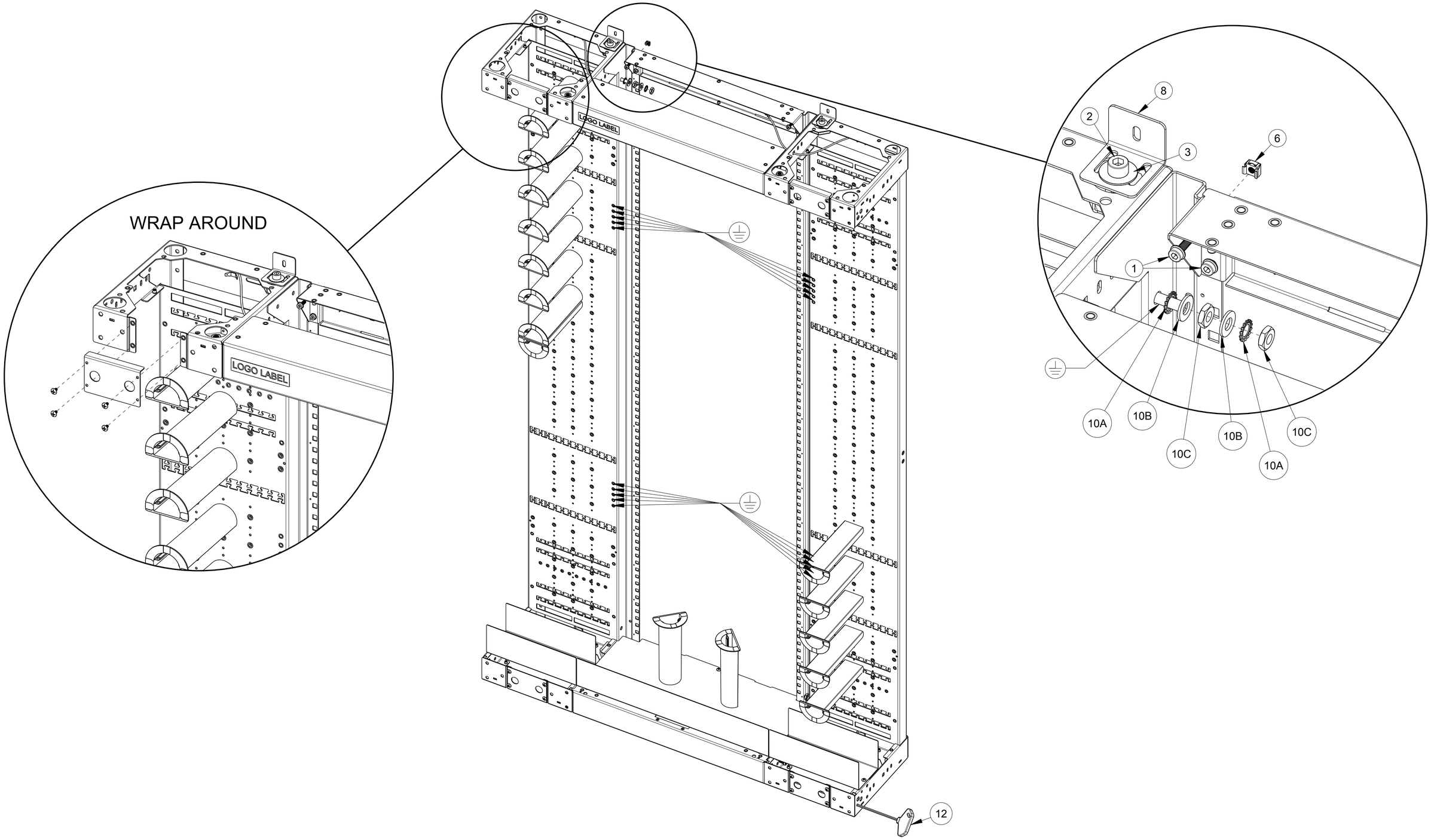

CommScope Connectivity Belgium bvba
B-3010 Kessel-Lo, Belgium Tel.:32-16-351011
www.commscope.com

COMMSCOPE®

TC 878/IP/5 07/11

Visit our website or contact your local CommScope representative for more information.
© 2015 CommScope, Inc. All rights reserved.
FIST and all trademarks identified by ® or ™ are registered trademarks or trademarks, respectively, of CommScope, Inc.
This document is for planning purposes only and is not intended to modify or supplement any specifications or warranties relating to CommScope products or services.

1

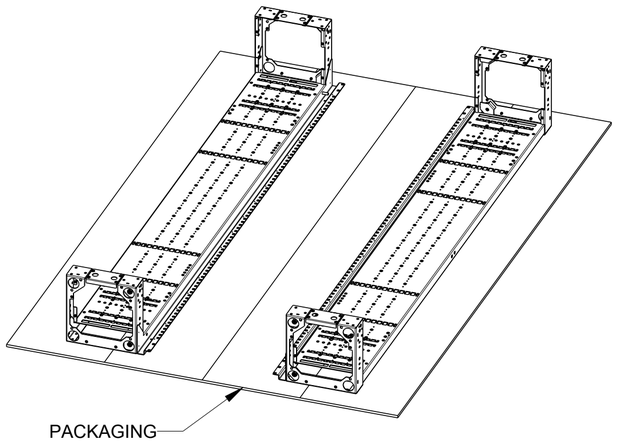

2

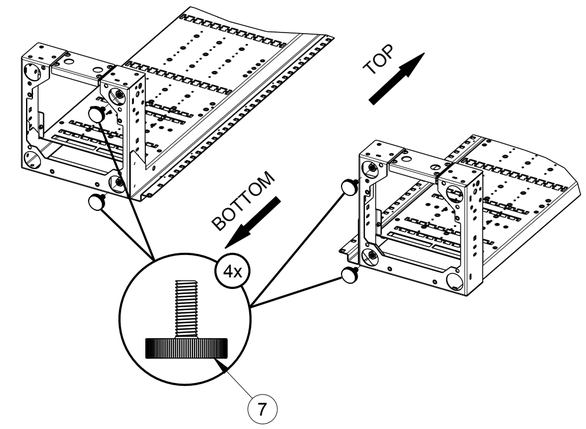

3

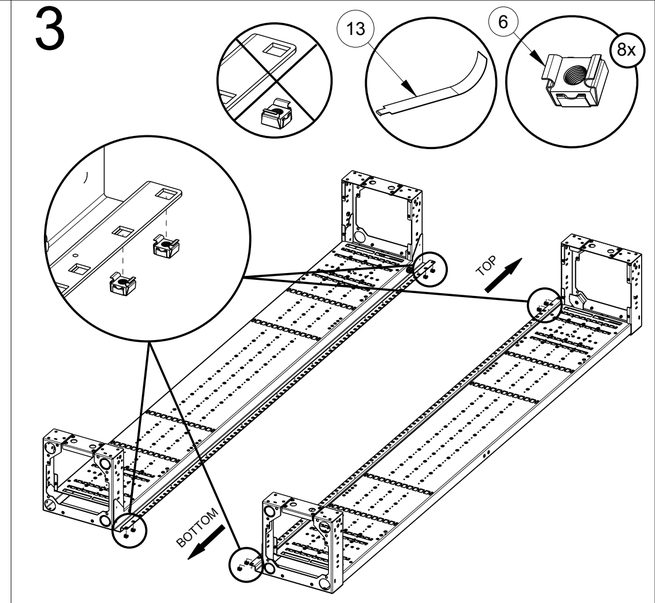

4

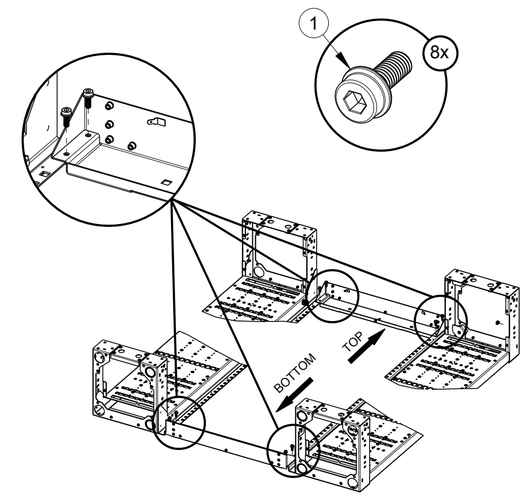

5

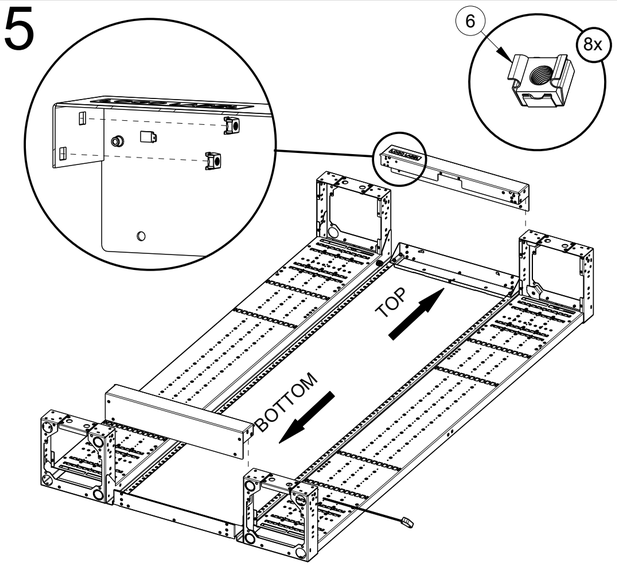

6

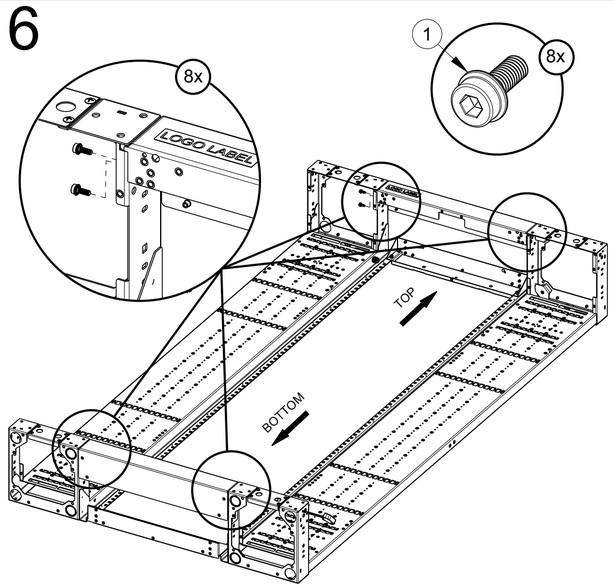

7

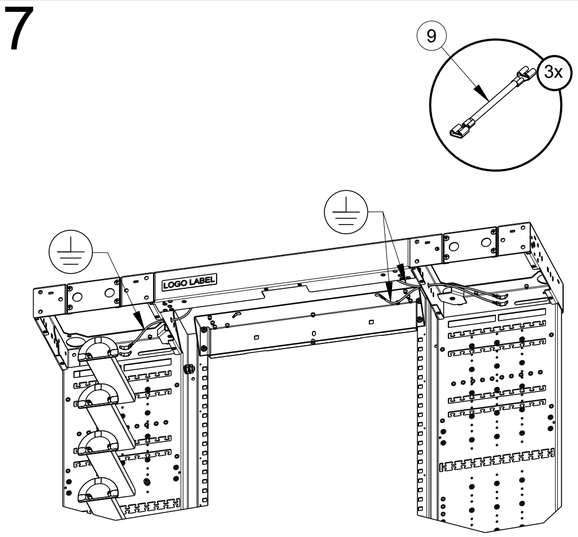

8

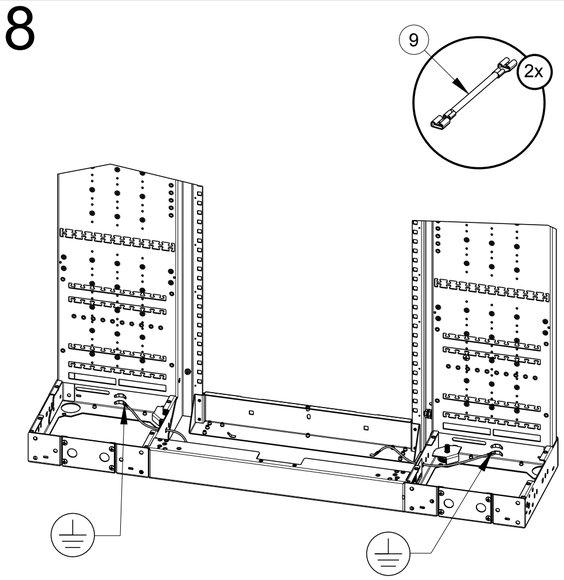

9

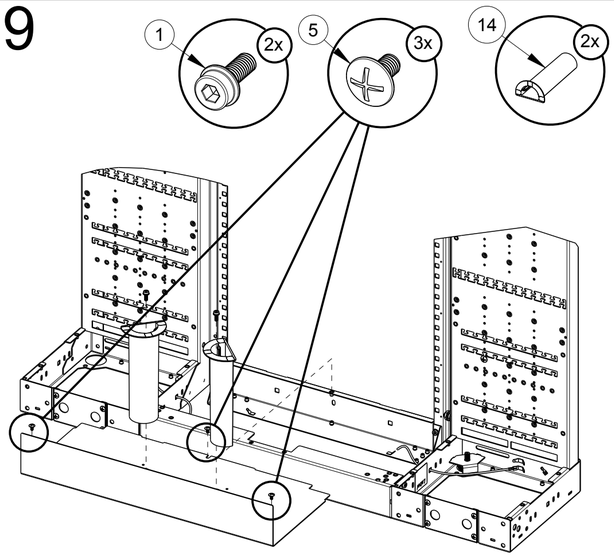

10

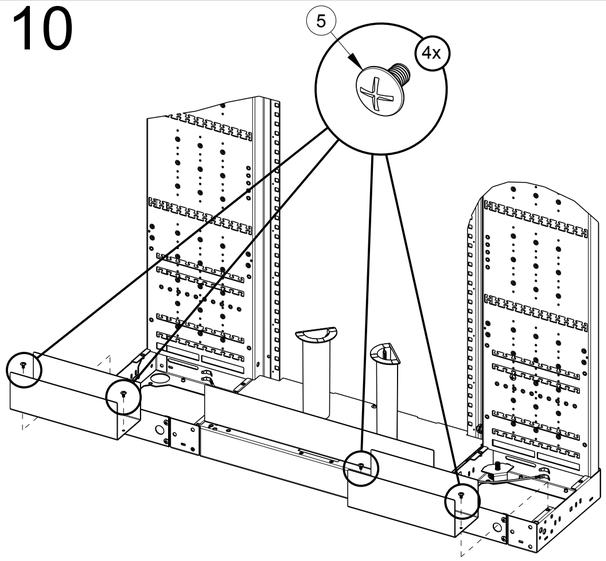

11a

WALL MOUNTING

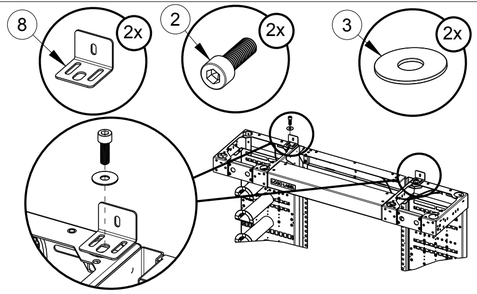

11b

BACK TO BACK MOUNTING

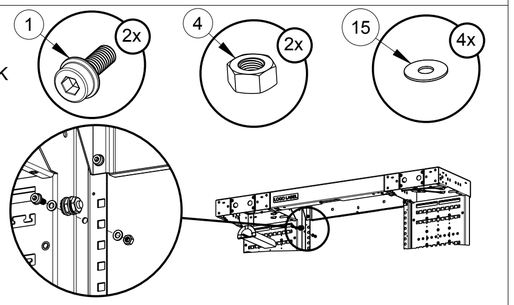

12

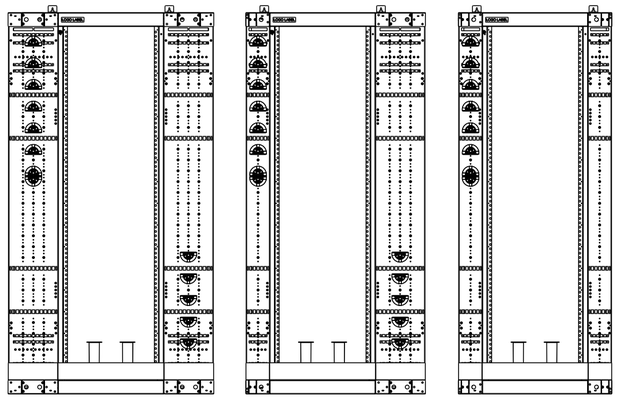

FIST_GR3_1200 FIST_GR3_1050 FIST_GR3_900