CODI-M

INSTALLATION INSTRUCTION
MONTAGEANWEISUNG

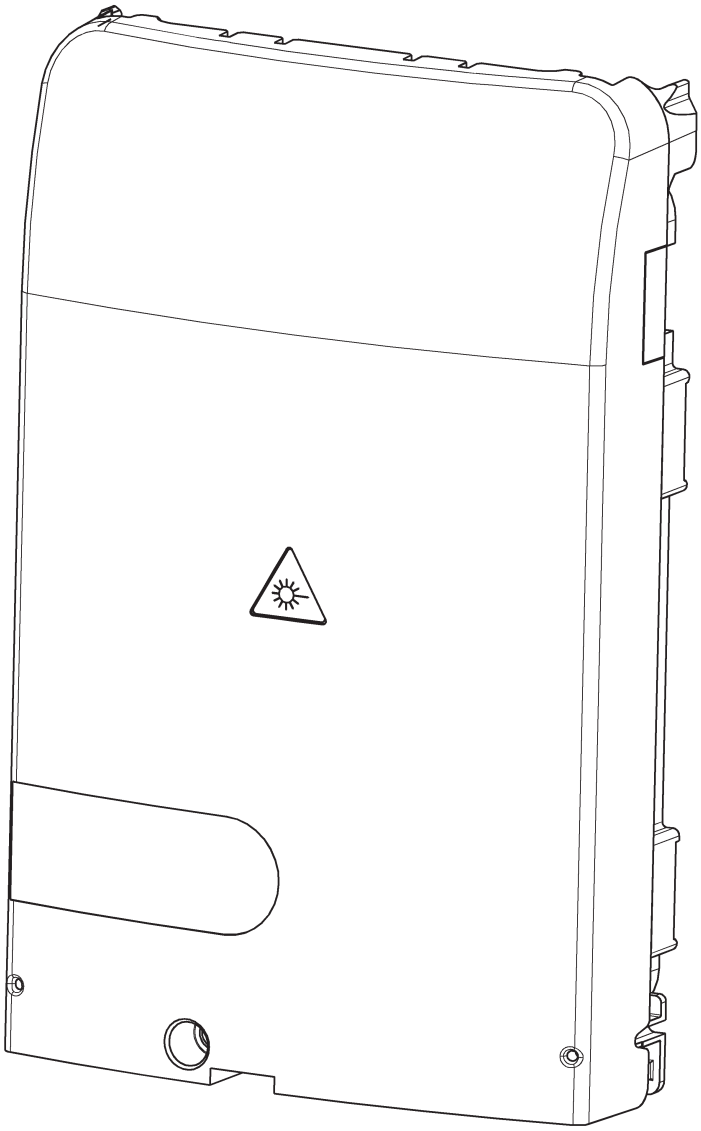

Deckel öffnen

Opening of cover

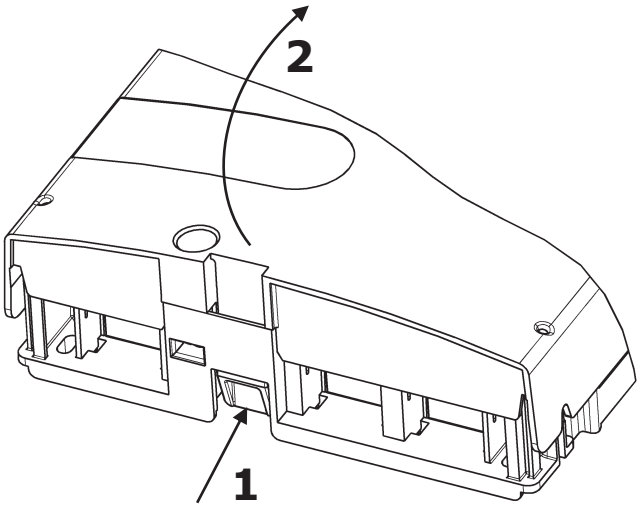

drücken / push

Öffnungswinkel

Opening angle

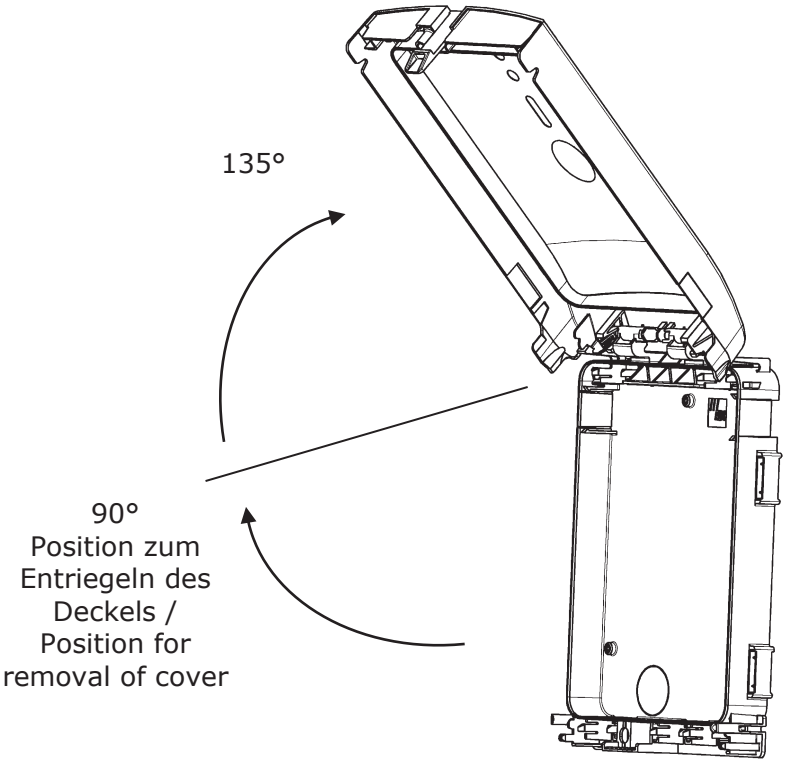

Deckel demontieren

Removal of cover

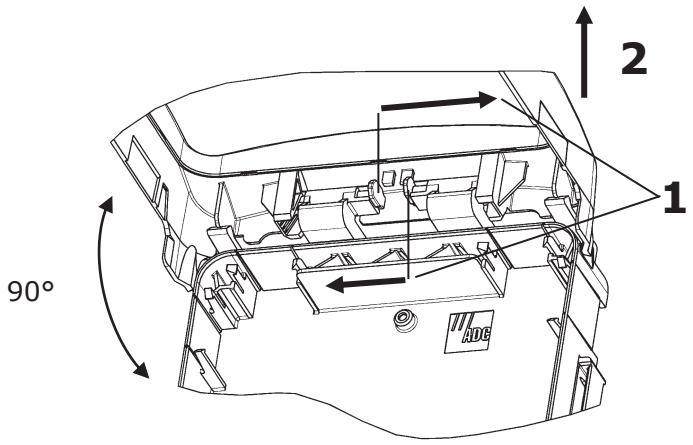

Deckel einrasten

Assembly of cover

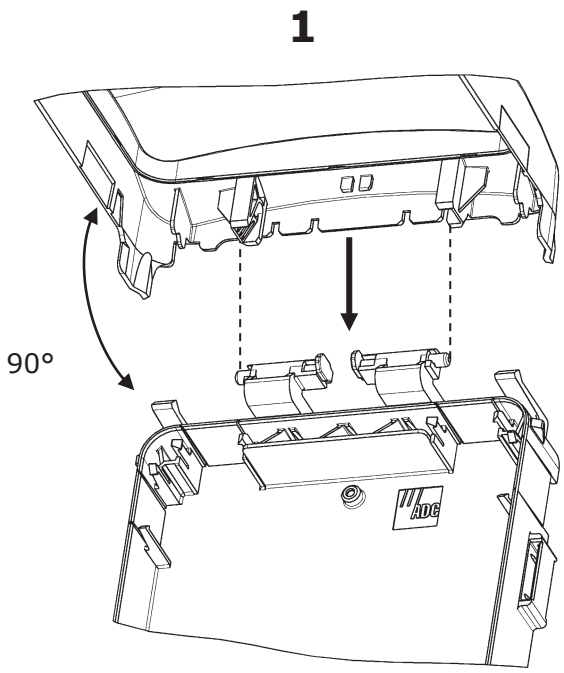

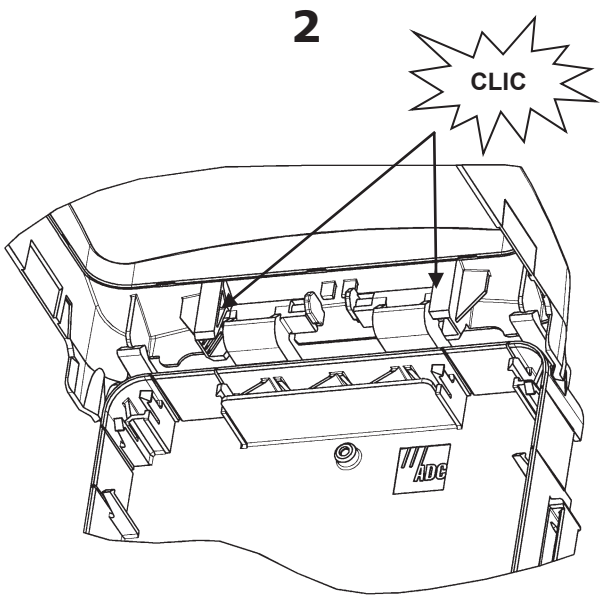

Einbau Rillenschraube (optional)

Assembly of Security Screw (optional)

Anzugsdrehmoment > 6 Nm ≤ 7 Nm / starting torque > 6 Nm ≤ 7 Nm

Rillenschraube M6 entsprechend TS0075/96 Deutsche Telekom / Security screw M6 according to TS0075/96 German Telekom

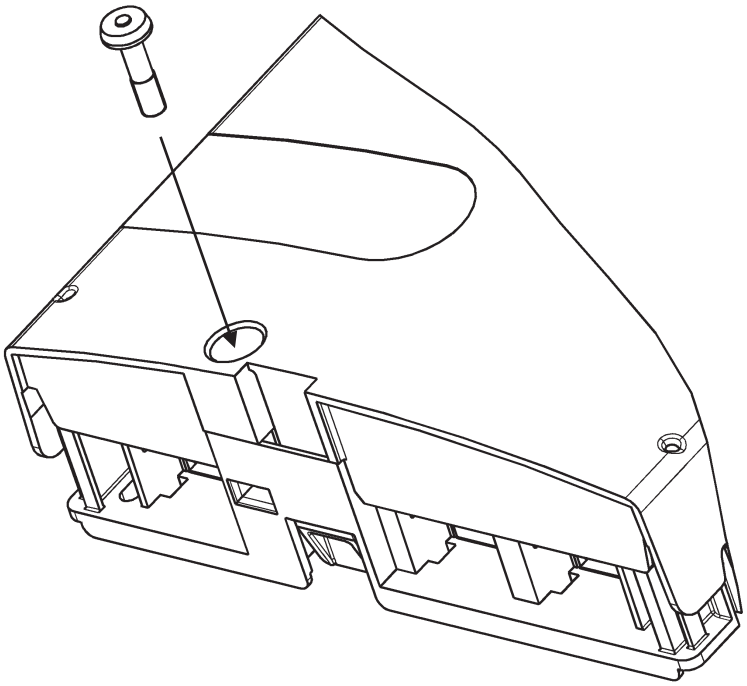

Anbringung Plombe

Use of wire seal

Durchführungsmöglichkeit für Draht zum Plombieren / Openings for wire seal

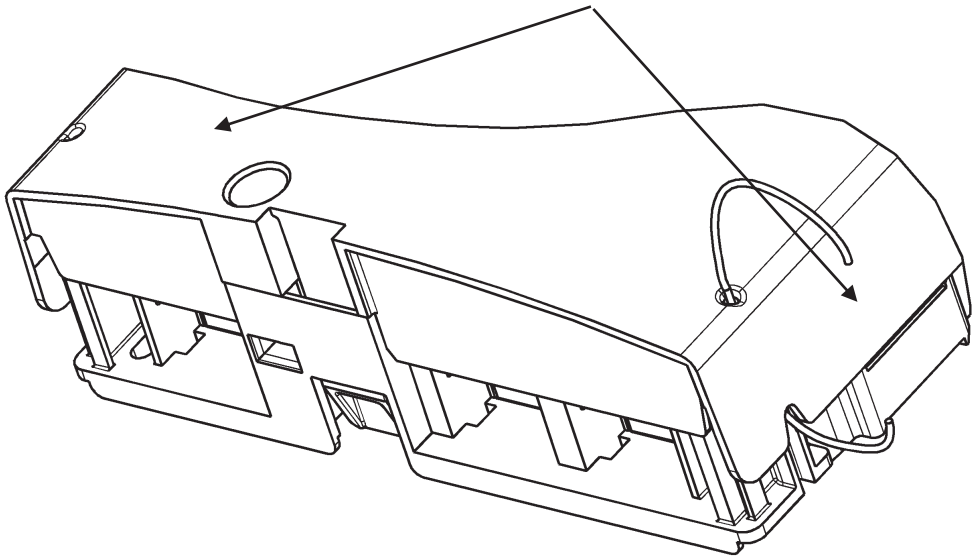

Wandbefestigung

Wall mounting

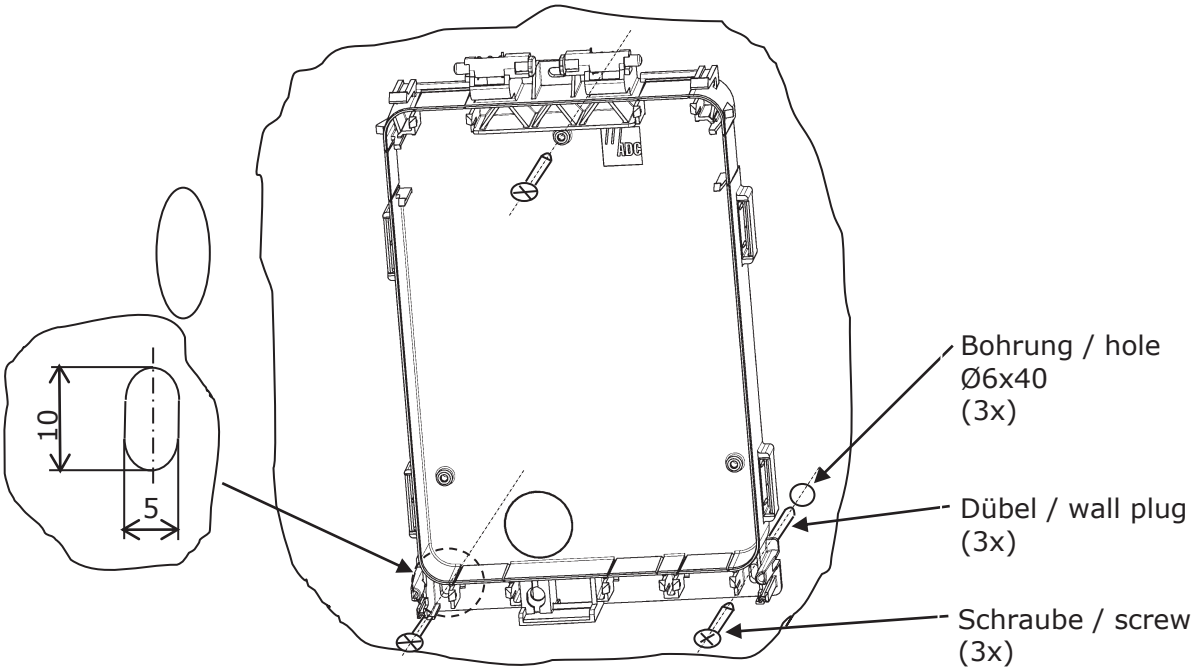

Bohrschablone (siehe Seite 10-11)

drill template (see page 10-11)

Minimum Abstand oberhalb des Gehäuses

Minimum clearance above the enclosure

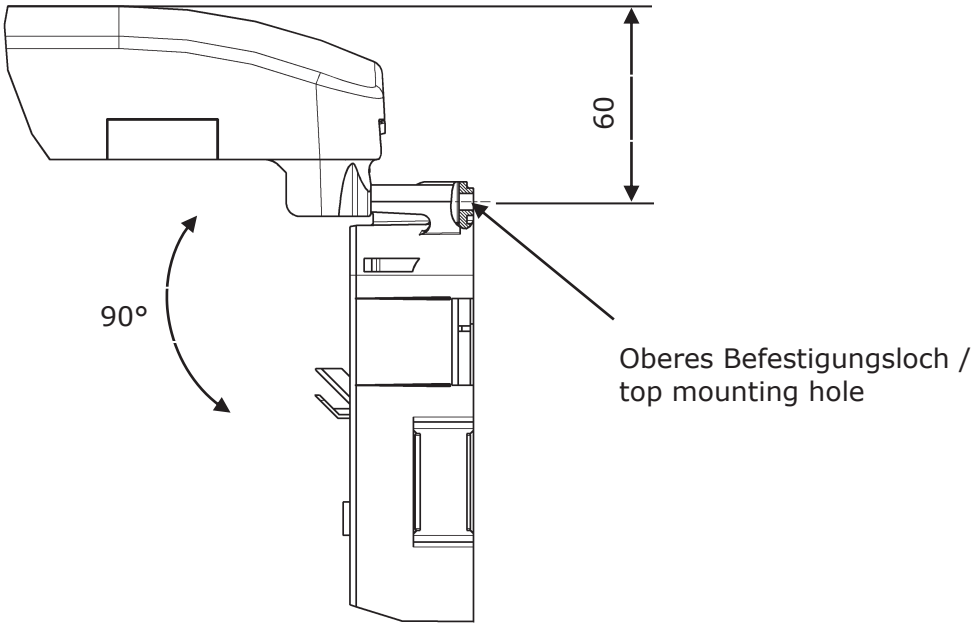

Gehäuse anreihen (optional)

Alignment of multiple boxes (optional)

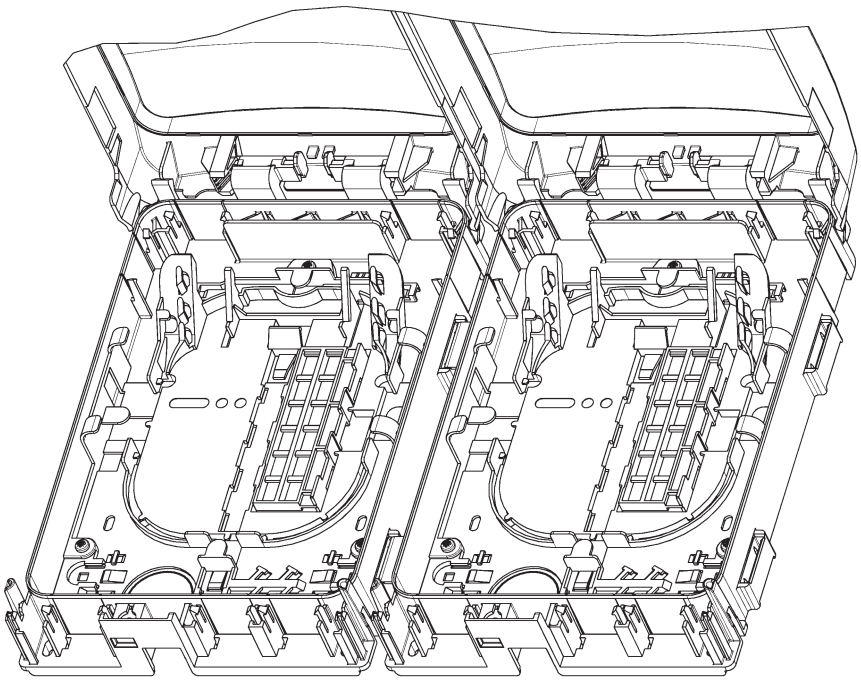

Halteklammer / alignment guide

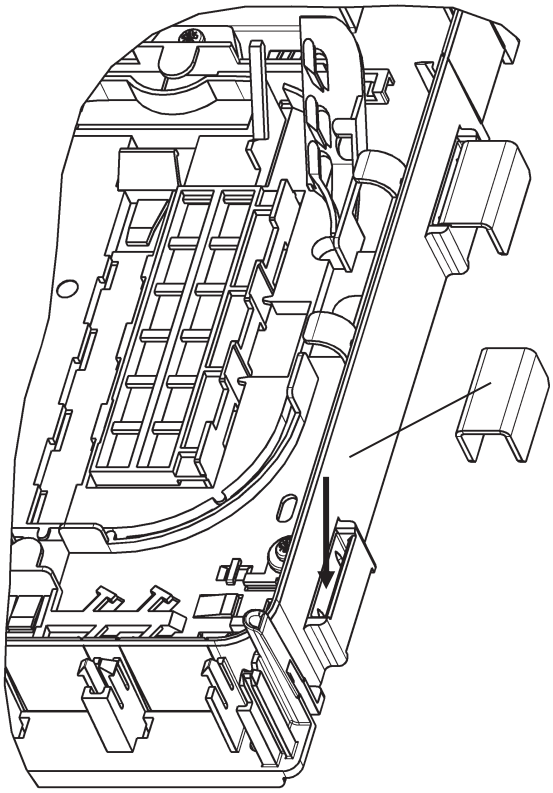

Halteklammer / alignment guide (2x)

Dichtungen Grommets

3

Weitere Zugänge für Kabel / Additional entry points for cables

2 Vorgeschlagene Eingänge für Stich- und Durchschleiferkabel / Suggested position for drop

1 Vorgeschlagene Eingänge für Rangierkabel / Suggested position for patch cords

1	2	3

Verfügbare Dichtungen

Available grommet types

für Stich- und Durchschleiferkabel / for drop and express cables		für kleine Kabeldurchmesser und Rangierkabel / for small cable diameters and patch cords			für rückseitigen Zugang / for rear access
Ø 5-7 mm	Ø 7-12 mm	< Ø 3 mm	< Ø 5 mm	Ø 8 mm	< Ø 12 mm
MBF-ACC-GR20701-01	MBF-ACC-GR21201-01	MBF-ACC-GR20324-01	MBF-ACC-GR20512-01	MBF-ACC-GR20804-01	6541201400
GROMMET IP55 1X05-07	GROMMET IP55 1X07X12	GROMMET IP55 24X03	GROMMET IP55 12X05	GROMMET IP55 4X08	SEAL GROMMET A30/A100 BOX
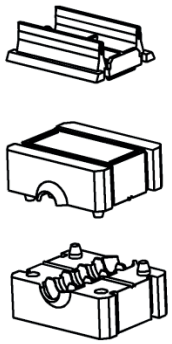	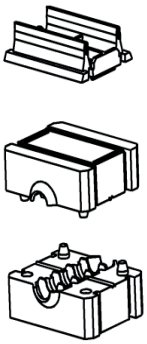	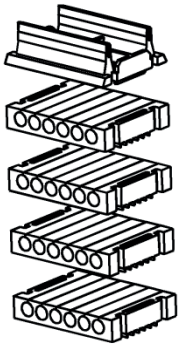	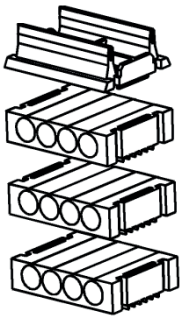	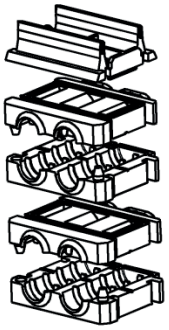	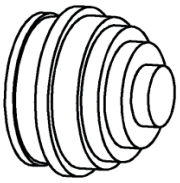

Kabeleingänge ausbrechen

Open cable entries

Bruchkanten einritzen / Score edges	Fenster ausbrechen / Break out window	Bruchkanten entgraten / Deburr edges	Dichtungshälfte und Kabel einlegen / Insert grommet half and cable	2. Dichtungs-hälfte und Deckel einsetzen / Insert 2nd grommet half and cover
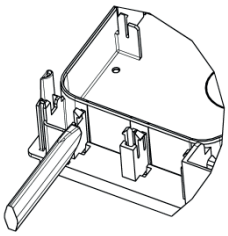	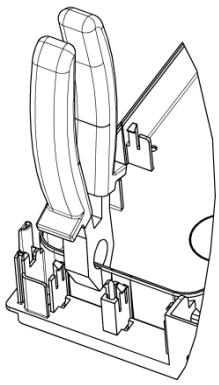	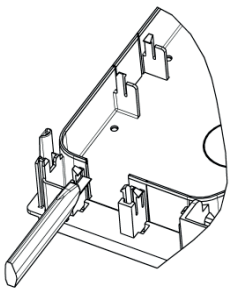	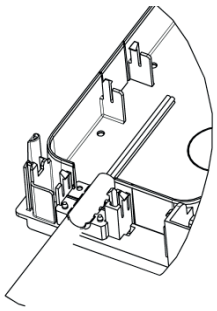	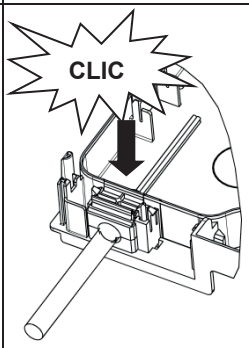

Kabeldurchführungen der Rangierkabeldichtung vorbereiten

Preparation of cable entries of grommets for patch cords

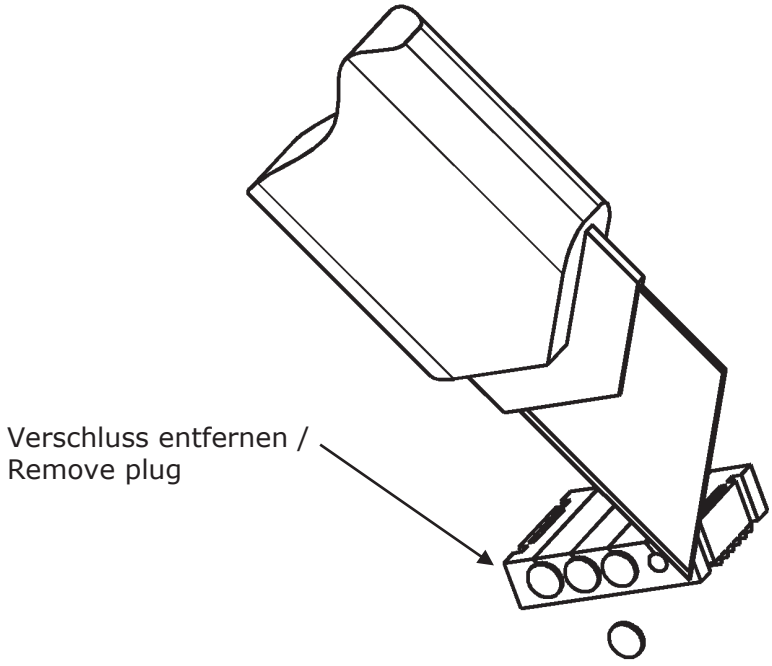

Einführen der Dichtung für rückseitigen Zugang

Preparation of grommet for rear access

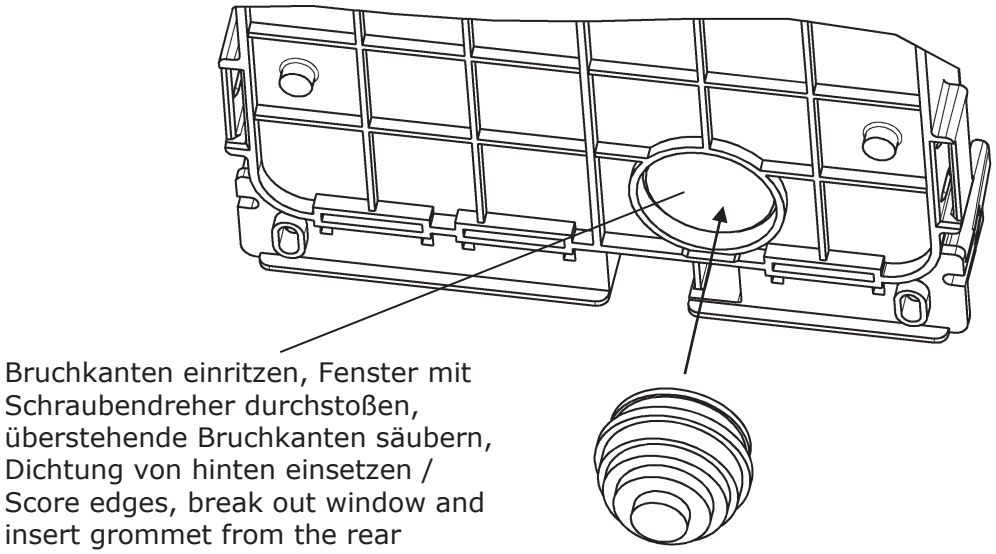

Einsetzen der Zugentlastung

Assembly of strain relief

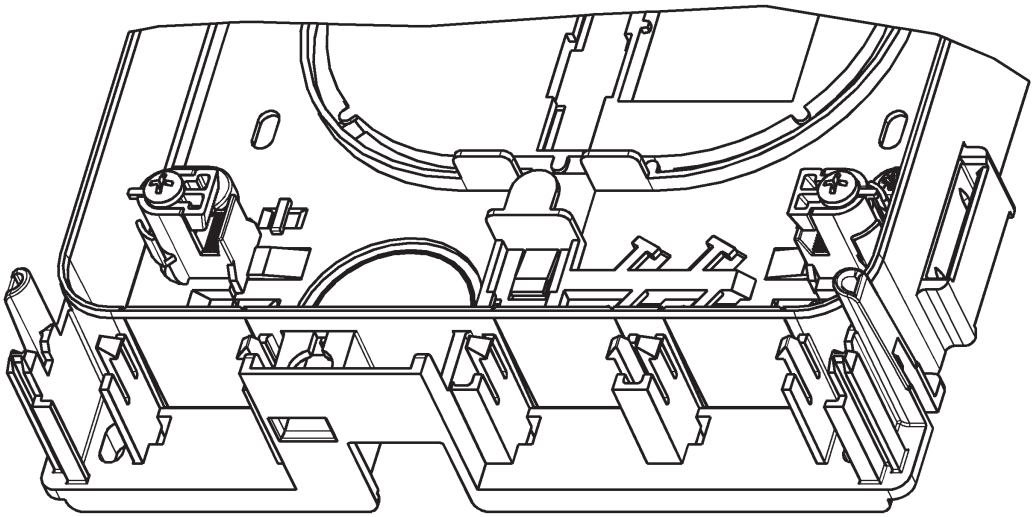

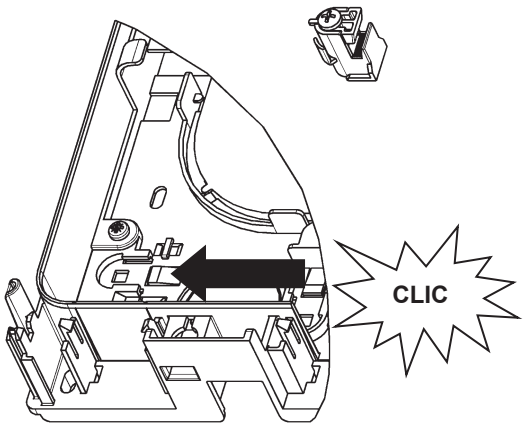

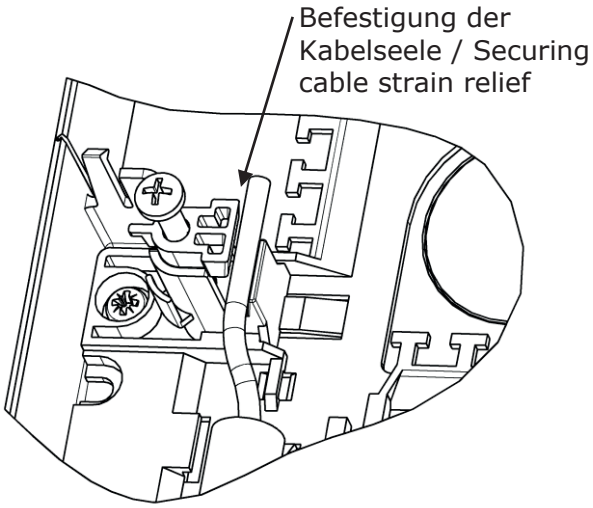

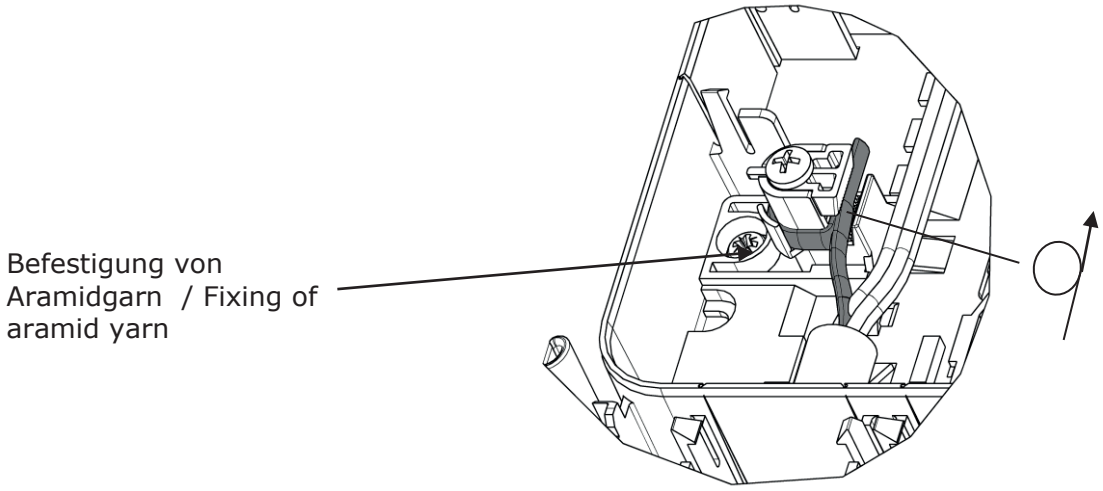

Empfohlene Verlegung eines Durchschleifers

Recommended routing of express cable

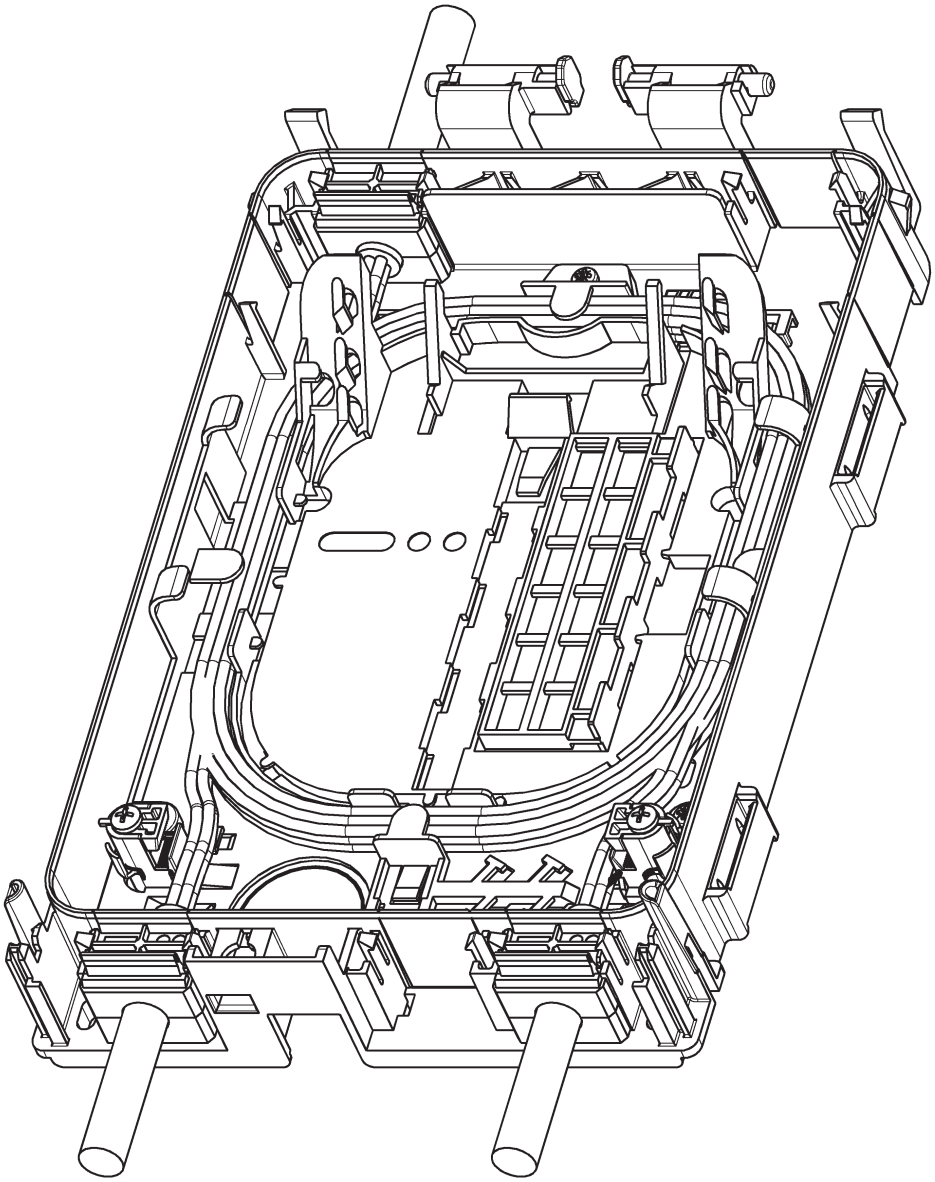

Verlegungsmöglichkeiten / Routing Options			
	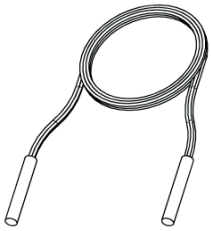	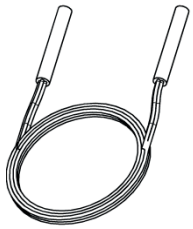	

Ein- und Ausbau Spleißkassette

Assembly and disassembly of splice cassette

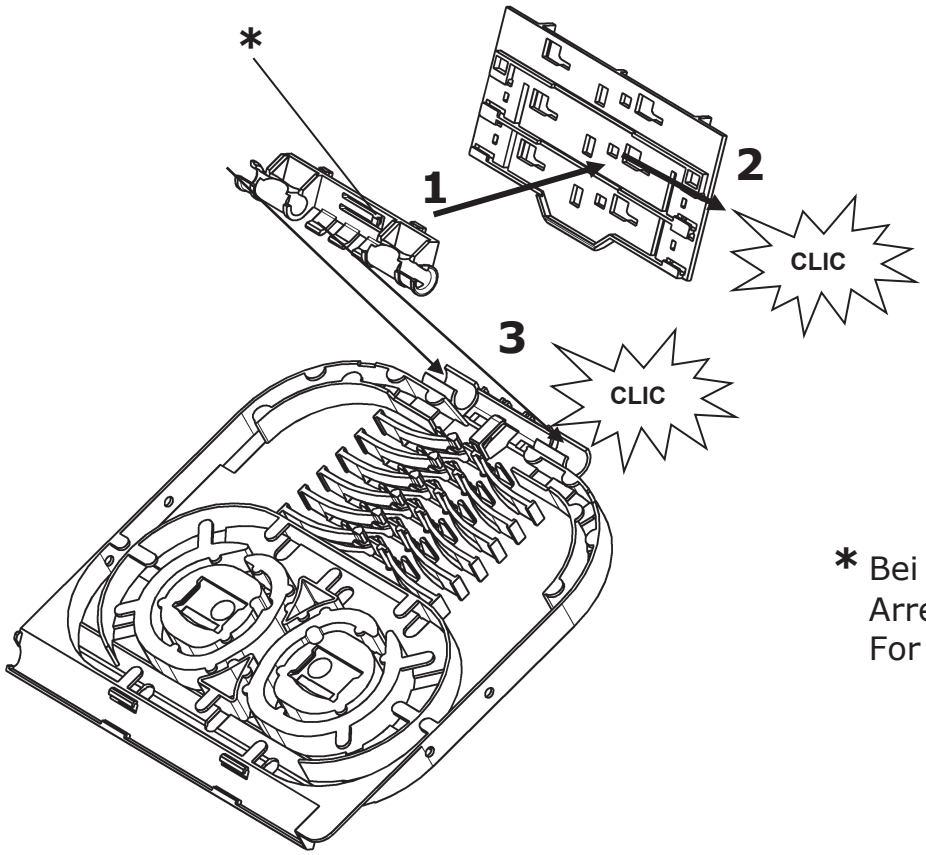

* Bei Demontage
Arretierung lösen /
For disassembly pull lever

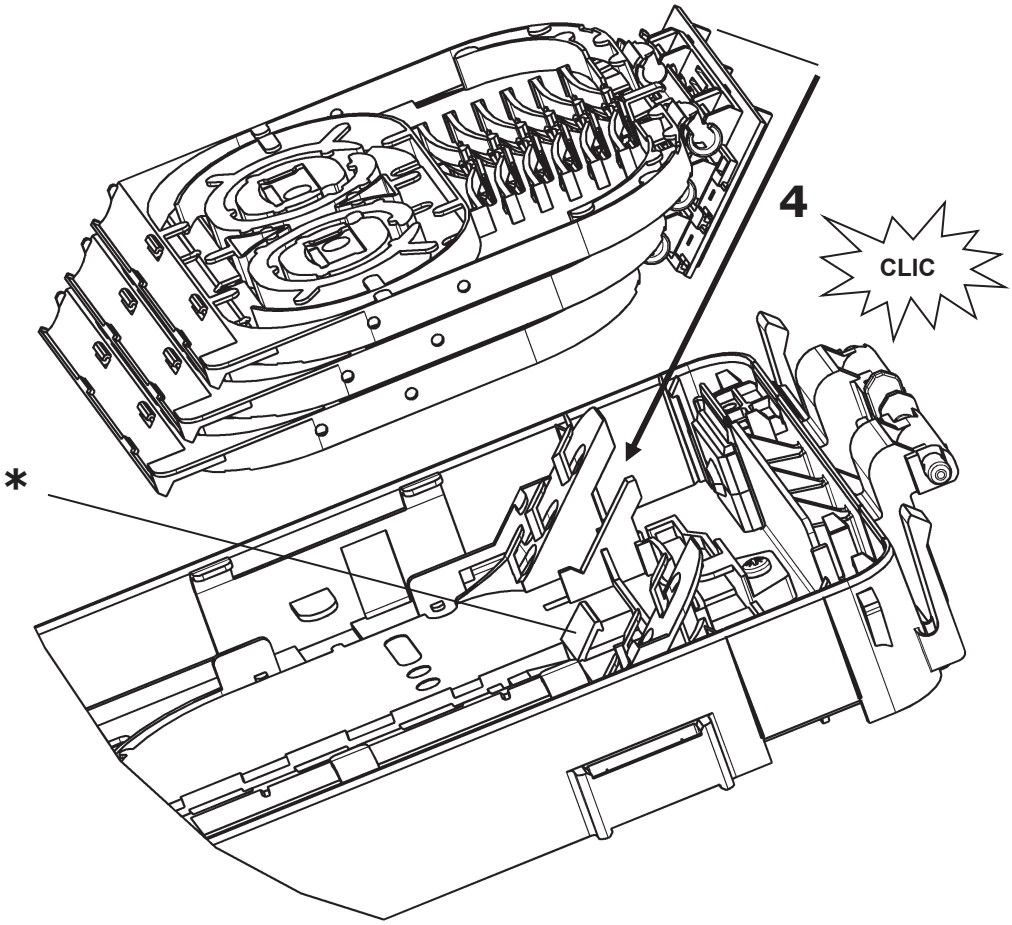

Ein- und Ausbau Spleißkassette

Assembly and disassembly of splice cassette

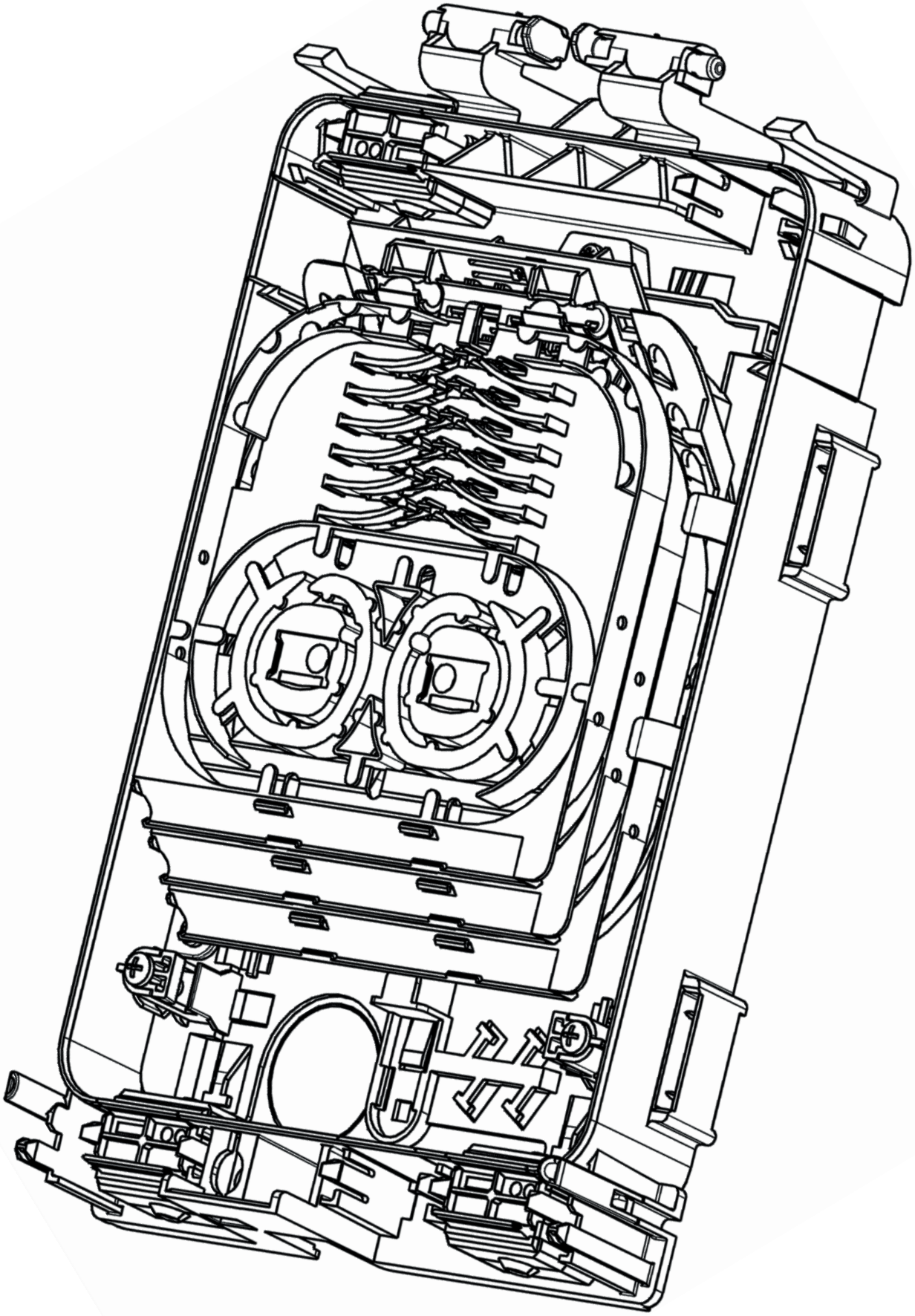

Ein- und Ausbau Kassette SC

Assembly and disassembly of SC cassette

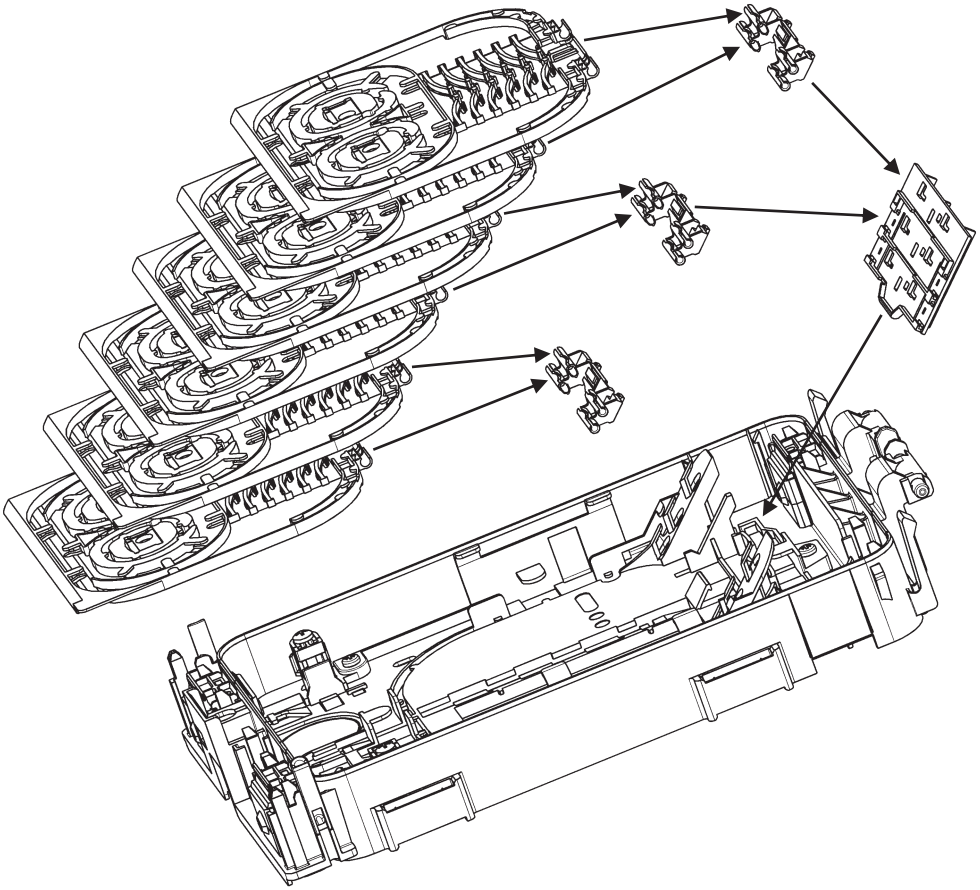

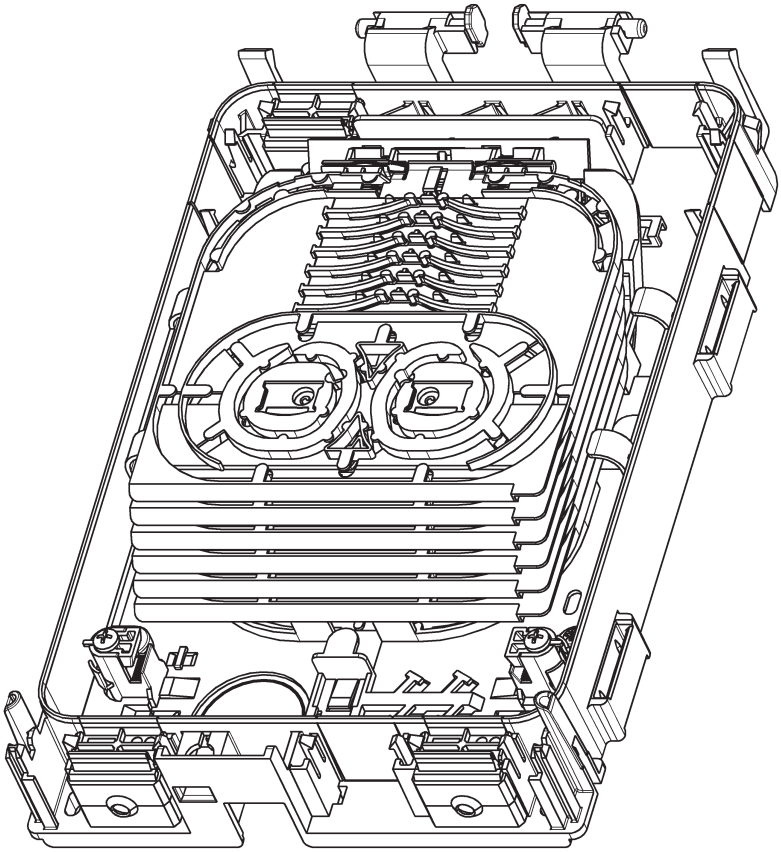

Einbau Kupplungen

Assembly of F/O adapter

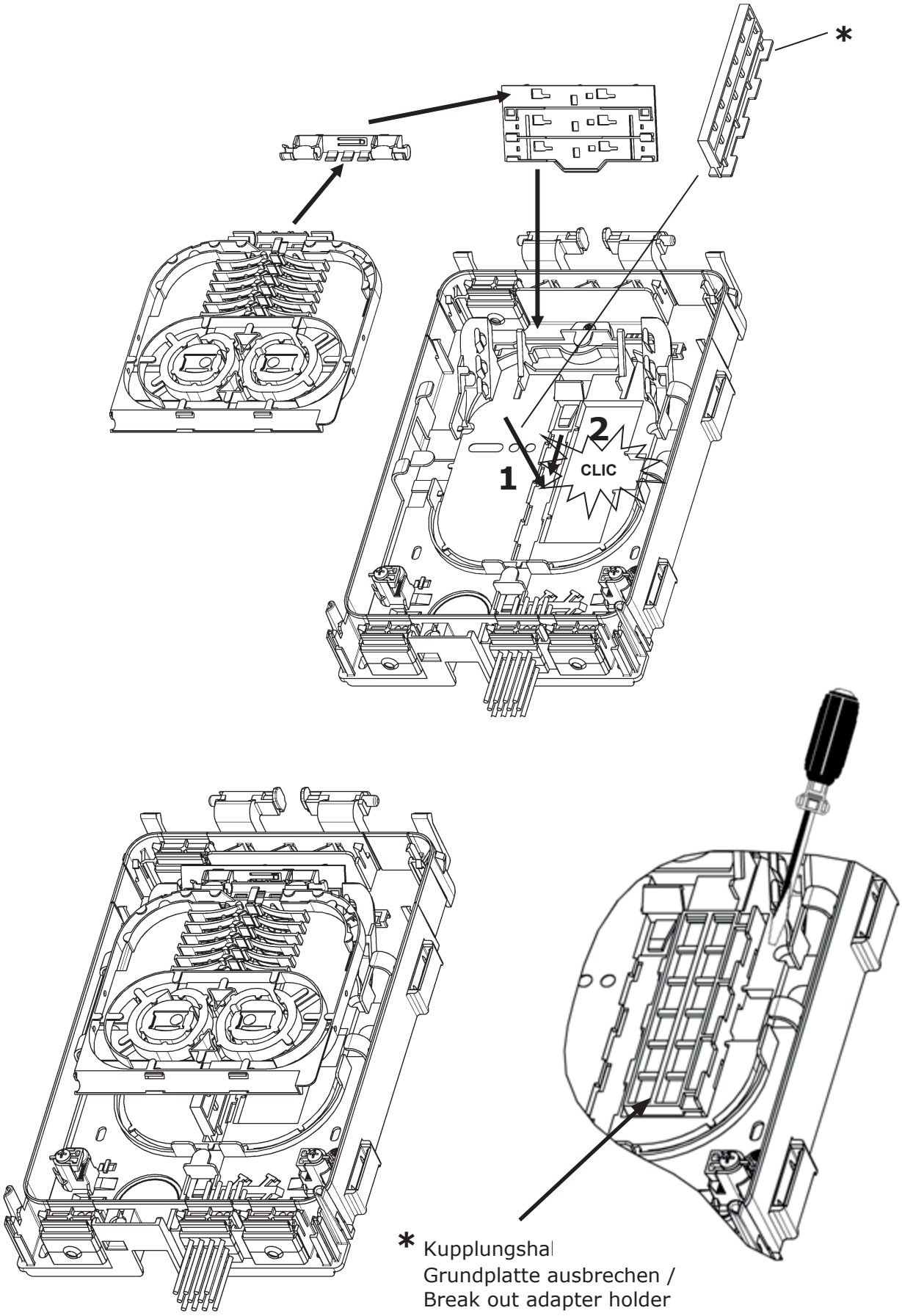

Tyco Electronics Raychem bvba
Diestsesteenweg 692
B-3010 Kessel-Lo, Belgium
Tel.: 32-16-351 011
Fax: 32-16-351 697
www.te.com
www.telecomnetworks.com

TE (logo) and TE Connectivity are trademarks of the TE Connectivity group of companies and its licensors.

While TE Connectivity and its affiliates referenced herein have made every reasonable effort to ensure the accuracy of the information contained in this catalog, TE Connectivity cannot assure that this information is error free. For this reason, TE Connectivity does not make any representation or offer any guarantee that such information is accurate, correct, reliable or current. TE Connectivity reserves the right to make any adjustments to the information at any time. TE Connectivity expressly disclaims any implied warranty regarding the information contained herein, including, but not limited to, the implied warranties of merchantability or fitness for a particular purpose. TE Connectivity' only obligations are those stated in TE Connectivity' Standard Terms and Conditions of Sale. TE Connectivity will in no case be liable for any incidental, indirect or consequential damages arising from or in connection with, including, but not limited to, the sale, resale, use or misuse of its products. Users should rely on their own judgment to evaluate the suitability of a product for a certain purpose and test each product for its intended application.

TC1006/IP/2 01/12